Van N Camp

FRONT BUMPER

Mercedes-benz Sprinter

Vehicle front

BUILT FOR ADVENTURE.
ENGINEERED FOR STRENGTH.



INSTALL TIME
30 MINUTES

RECOMMENDED
1 PEOPLE

NO DRILLING REQUIRED
WRENCH OPERATION

BEFORE YOU BEGIN

IMPORTANT SAFETY INFORMATION

- Please read all instructions carefully before installation.
- Before starting, please ensure that all parts are in place.
- Improper installation may result in vehicle damage or personal injury.
- Before each trip, check all installation points and fasteners.
- If you are not familiar with vehicle modifications,
  it is recommended to have a professional install it.

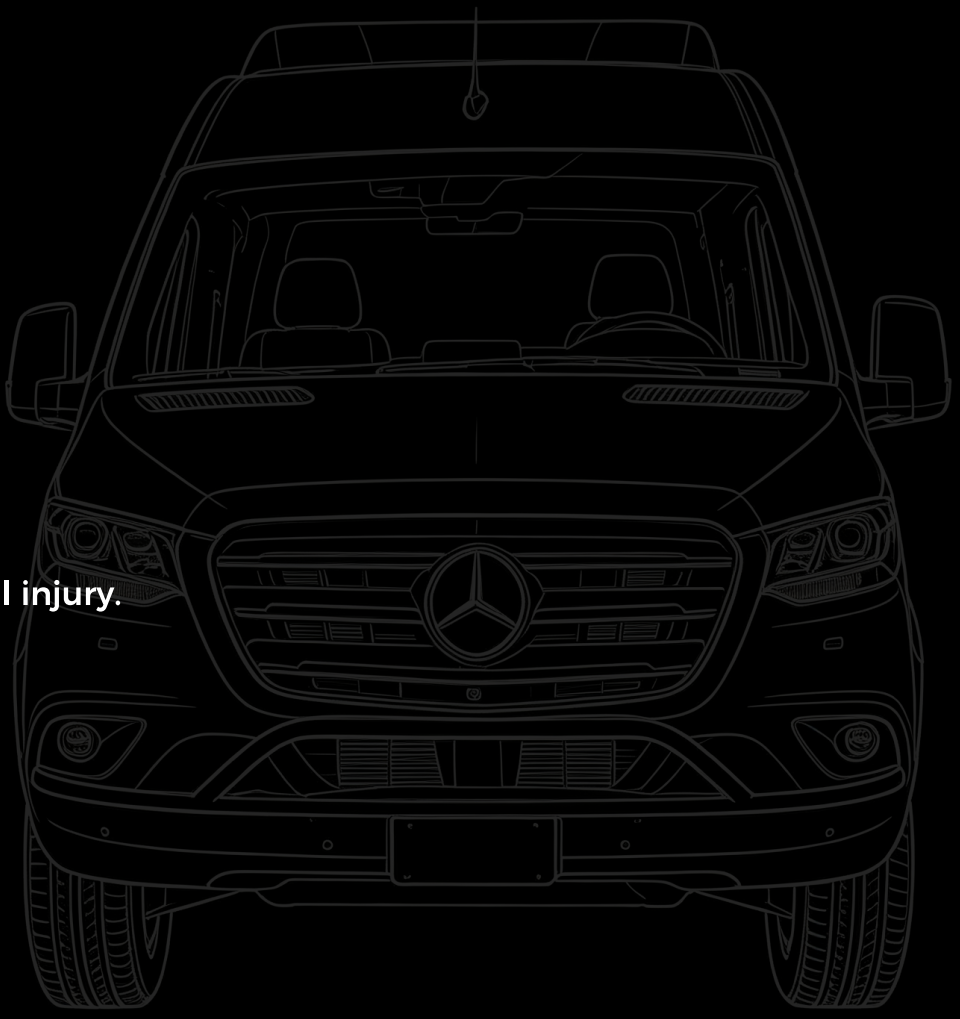

PACKAGE CONTENTS

(Before installation, please check that all accessories in the packaging are complete.)

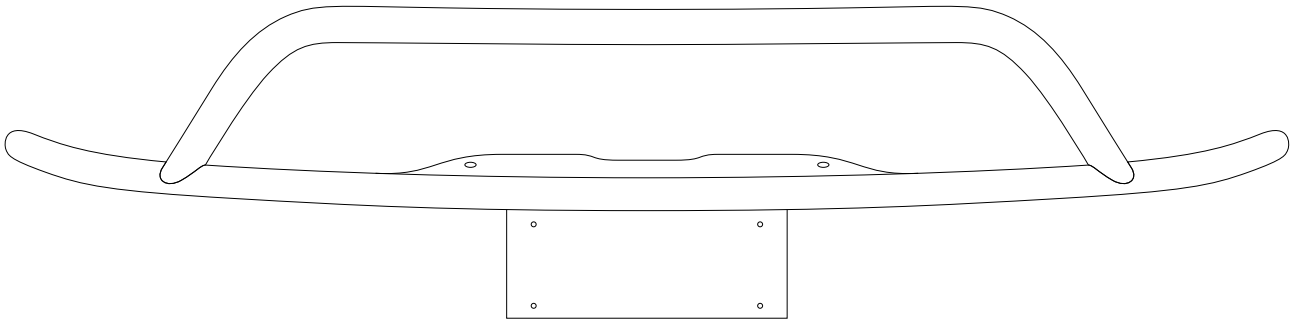

a1

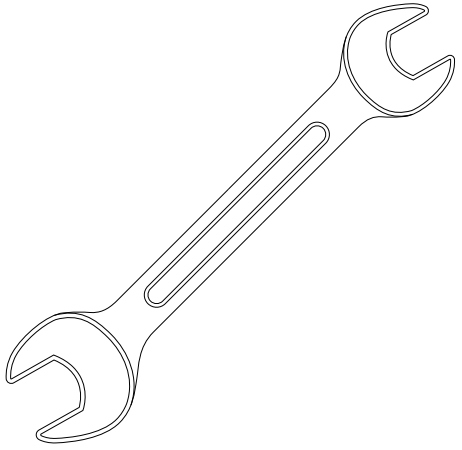

a2

QTY 2

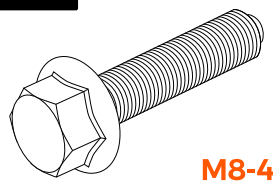

M8-44
external hex flange screws

QTY 2

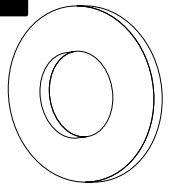

M8
flat washers

QTY 2

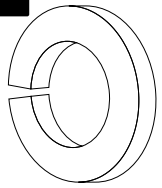

M8
Spring Washer

✱ Please check the product and the built-in installation space of the car before installation to ensure a smooth installation process,Do not proceed with installation if any significant damage is found. Contact your supplier immediately.If the factory mounting holes are deformed or obstructed, repair or clean them before proceeding.

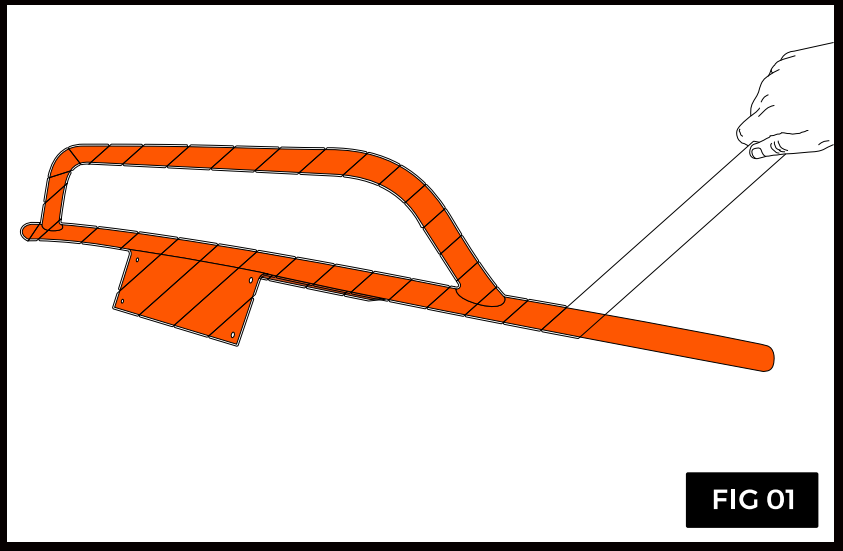

FIG 01

1

Remove protective film and inspect the product

(Carefully peel off the protective film from the product surface. Thoroughly inspect for any scratches, dents, deformation, or coating defects. Do not install if any significant damage is found; contact your supplier immediately.)

2

Check the pre-existing mounting holes on the original Mercedes-Benz Sprinter front bumper area to ensure they are intact, free of obstructions, and without thread damage or distortion, to guarantee smooth installation.

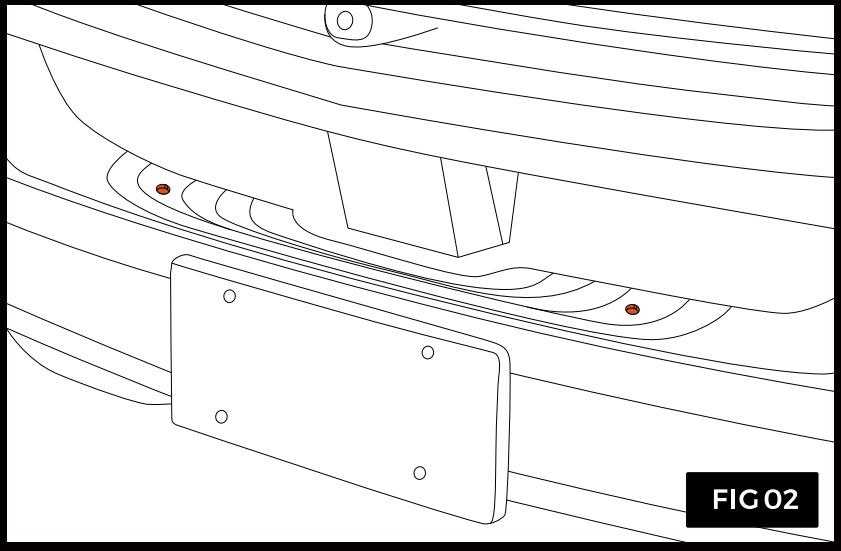

FIG 02

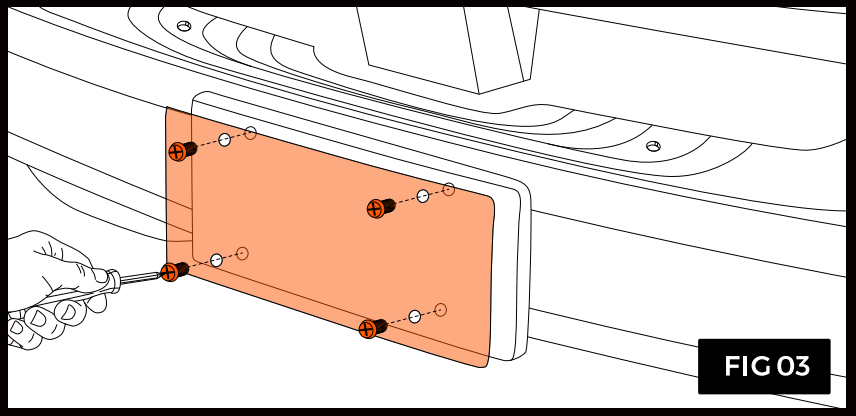

FIG 03

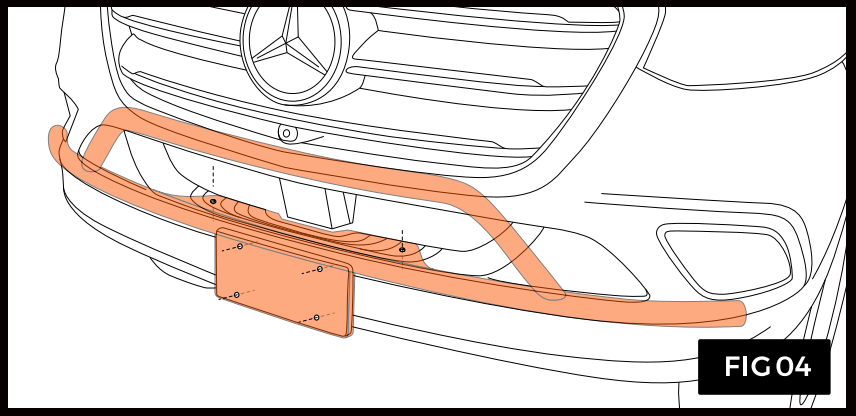

FIG 04

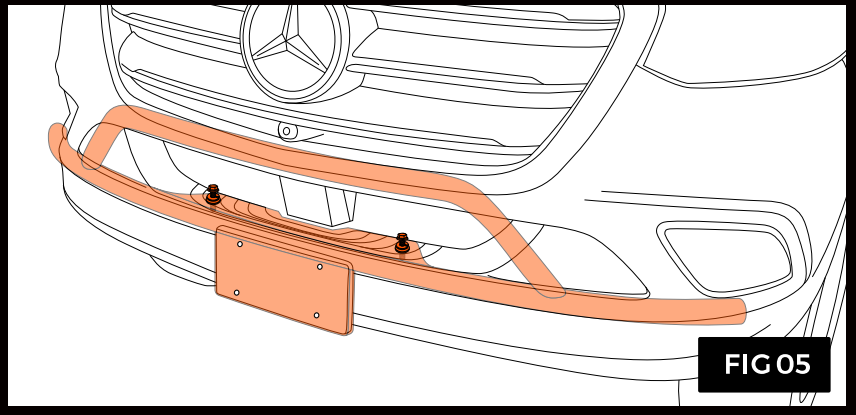

FIG 05

3

Using the appropriate tool, remove the four screws securing the front license plate and take off the plate.

Store the removed screws and license plate securely to avoid loss.

4

Lift the new front bumper and align the mounting holes on its fixing plate with the corresponding pre-existing holes on the original vehicle bumper, ensuring they are perfectly matched.

5

Take an M8-44 hexagonal screw, first insert an M8 spring washer, then an M8 flat washer, and finally thread the screw through the product's fixing plate hole and the reserved hole on the original vehicle in order.

(Ensure that each bolt is accurately and vertically aligned with the hole before insertion; misalignment may prevent proper tightening and could lead to product loosening or detachment.)

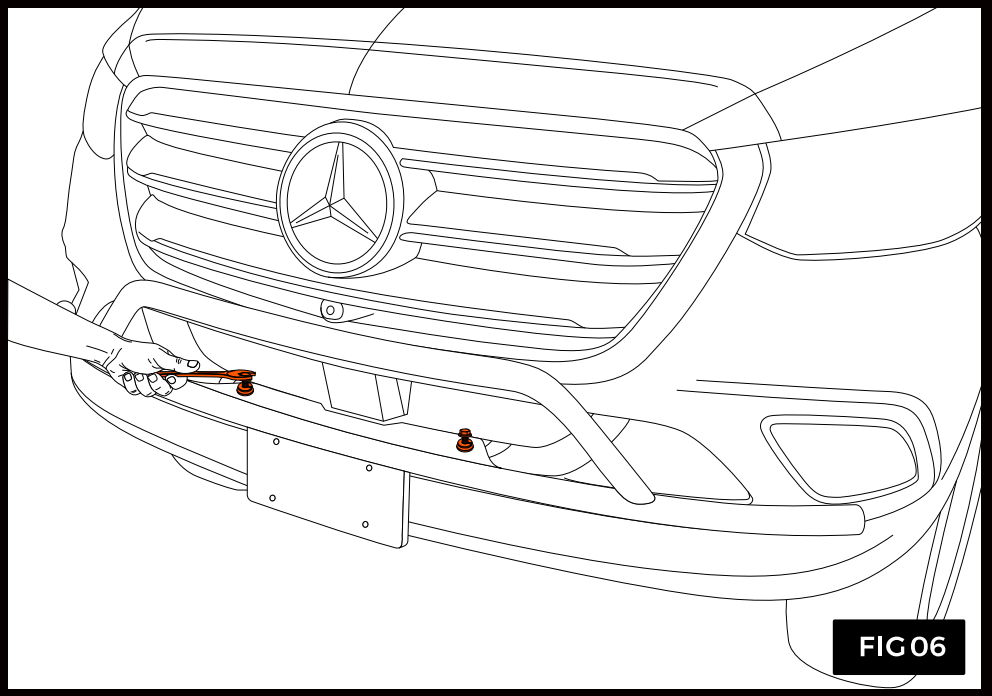

FIG 06

6

Using a wrench along with Tool A2, tighten the M8-44 hexagon head bolts until the product no longer wobbles noticeably.

7

Align the previously removed front license plate with the designated mounting holes on the new bumper, and reinstall the four original screws in sequence.

Ensure all screws are fully tightened to prevent the license plate from becoming loose or falling off during driving.

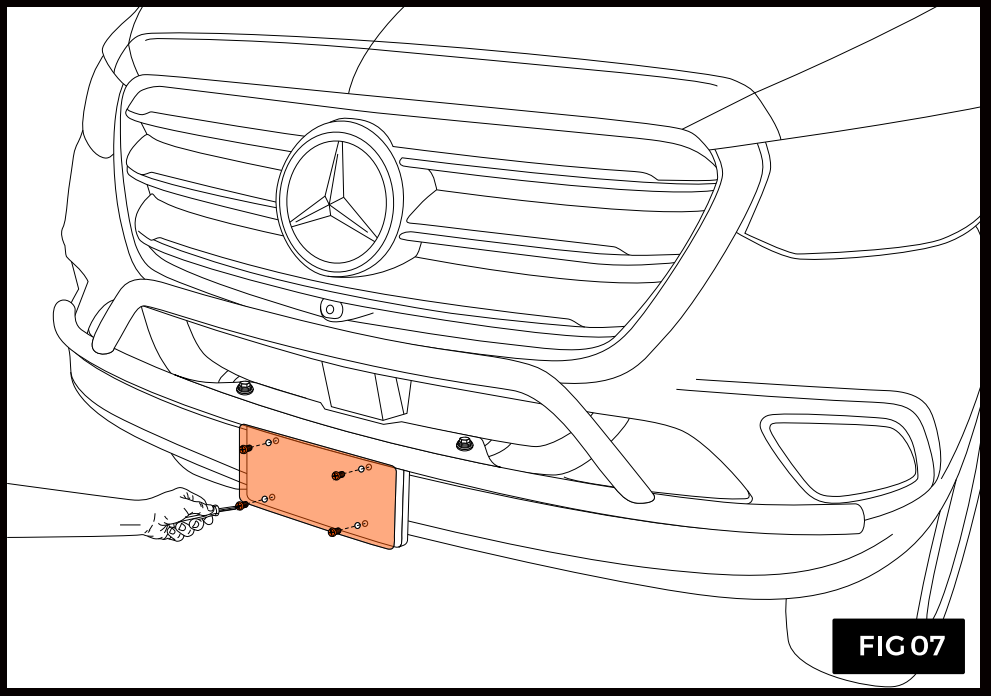

FIG 07



NEED HELP?

support team:
support@vanncamp.com

SHARE YOUR BUILD

Tag us on Instagram
@vanncamp
and share your adventures!